AIMS Power™
a Division of the AIMS Corporation

PWRIC300012S

OPERATION MANUAL

Congratulations on the purchase of this top quality power inverter!

It is very important that you read and understand this instruction manual completely prior to use.
Contained are important connection tips, safety issues, and warranty information.

Make sure to read this manual carefully and follow the instructions.
Not doing so may cause damage or malfunctions to the inverter

Features

This product is a pure sine inverter with built-in 30Amp Smart charger and auto transfer.
This inverter uses leading edge technology to generate the Vac output digitally.
It uses a built in automatic control program.
The ac output uses built-in pulse control circuit, minor fluctuations in the output are sensed and corrected.
Even during sudden power variations, your equipment is protected from spikes in the voltage.
Even when input Voltage is varying or high, the output is protected by our PWM design.
This product connects to a 12Vdc battery(bank) and also accepts 110Vac Input(from city power or generator). When ac input is present then this product will smart charge the battery (bank) and pass the ac through to the ac output. When ac input is no longer present ac output will momentarily disappear. Charger turns off. Inverter turns on and provides a pure ac sine wave to the ac output. When ac input returns this product will turn inverter off. Start charging and ac input will be passed to ac output.

Reference

This product produces 120Vac power by using 12Vdc input power sources.
Your inverter uses 12Vdc only. It can not be modified in the field.
This Power inverter can power very delicate devices and/or appliances within the operating range.

Safety concern

This is a very high power device.
Keep away from anything flammable.
You should prepare 1 set of 1/0 for the dc input.
We further recommend no less than 12Awg for ac input and ac output connections.
Earth ground should be 10Awg.

Part name and location

Frontside Overview

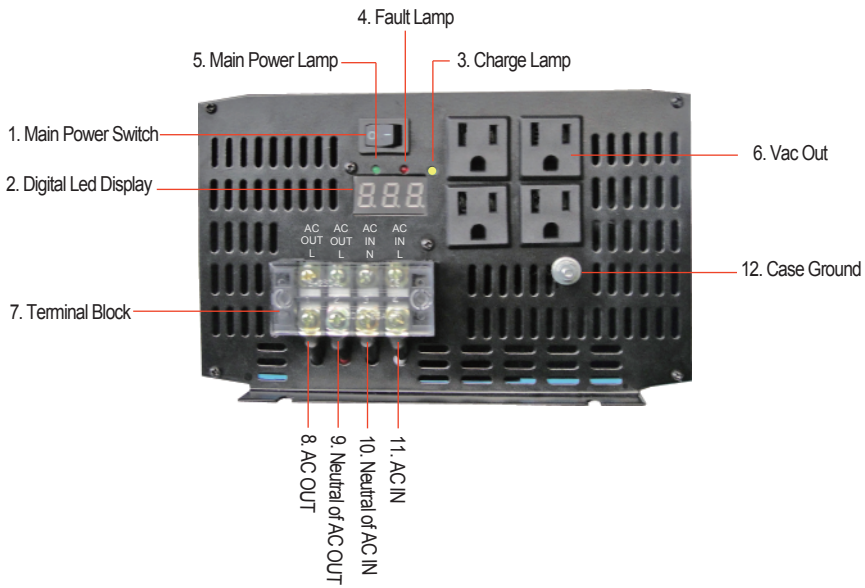

Backside Overview

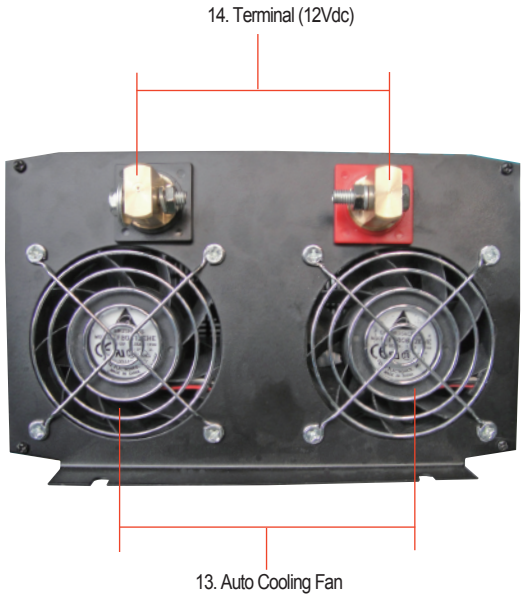

OVERVIEW

1. Main Power Switch

This is the main unit Power Switch. When this is turned OFF, the inverter is off. When turned ON, the inverter is on. Green ON Lamp will illuminate when ON and power will be available at the terminal block. Main On must be On for remote switch to control power.

2. Digital LED Display - indicates Voltage level of batteries.

LOAD-When inverter is in use, this indicates % of maximum Load. 0% for No Load or little load, 50% about 1500W Load. Display toggles between DC Volts and Load.

3. Charge Lamp

After power up this yellow lamp indicates ac input power is present and batteries are being charged, or if full, shut off.

4. Fault Lamp

This Red Lamp is lit whenever there is a fault. It may be Overload, Over Temperature, faulty Power inverter of low / high dc battery Voltage.

5. Main Power Lamp

This Green Lamp is lit after successful power up. Self test diagnostics passed and inverter,is ready for use.

6. Vac Out

This product is suplied with 4 standard ac outlets and 1 terminal block for direct connect. Either or both may be used slmultaneously.

7. Terminal Block

A direct connect terminal block has been provided for easy connection. Connect AC OUT L and AC OUT N for AC output of the inverter. Connect AC IN L and AC IN N for AC Input for charger.

NOTE: Appliance switch and Main Power switch need to be off, prior to making any connection. Disconnect from battery is strongly recommended.

8. AC OUT

This is the AC OUT along with step 6. When Main On Power will be live.

9. Neutral of AC OUT

The Neutral of AC OUT.

10. Neutral of AC IN

The Neutral of AC IN.

11. AC IN

City or generator AC Input Power.

12. Case Ground

Recommend grounding to Earth using 10Awg wire.

13. Auto Cooling Fan

These fans are thermally controlled and will turn on automatically when needed.

14. Terminal (12Vdc)

Input of the inverter,and output of the battery charger.

Prior to any connections make sure you match the battery voltage to the inverter input voltage. You will probably notice an arc when connecting a discharged or new power inverter. Make sure to connect battery (-) to Black and battery (+) to Red. Tighten terminals. In case of extreme vibration, go back and verify terminals are tight. Never over tighten.
1/0 wire size recommended.

Recommended Connection Procedure

1. Inspect product for visual damage.
2. This inverter is designed to be plugged into an AC and DC power source. The AC source may be City/ Shore/ Generator(single hot leg generator) power and the DC source is a 12Vdc battery(or bank of batteries). When the AC source is a usable power source, the inverter/ charger will use that incoming AC as the inverter's output AC and at the same time charge the battery bank. When the AC source is lost, then the inverter will shut off the charger, use the batteries and invert that power to produce AC on the output side of the unit.
3. Turn Main Power switch OFF. AC In should not be plugged into power source such as wall power or generator.
4. Connect all the Terminal Block wires that you intend to use. Remove the plastic protective cover. Connect wires or U- or O- lugs to appropriate block. Ensure no loose strands that may cause a short circuit. Vac Neutral and Hot on the terminal block are not reversible. Re-insert plastic protective cover.

Note: The AC input and AC output are seperate hot terminals and share neutral.

5. Multiple 6V dc or 12Vdc batteries are required.
   Connect 2 X 6 Vdc in series or 2 X12Vdc in parallel to make 12Vdc. See Diagram.
   You may connect any number of these configurations in parallel. See diagram.
6. Connect the "Red" + of inverter to the "Red" + on battery. Connect "Black" - of inverter to the "Black" - of battery as shown in Diagram. When final connection is made,there will likely be an arc.

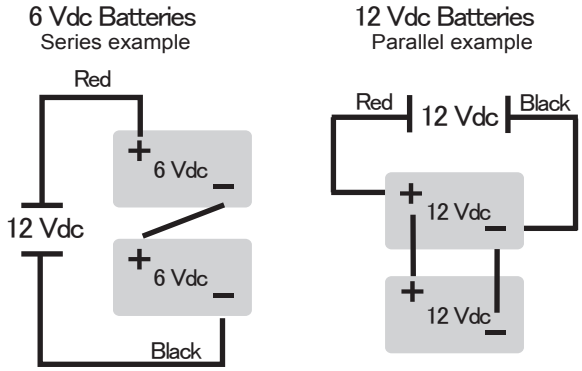

7. Terminal Block

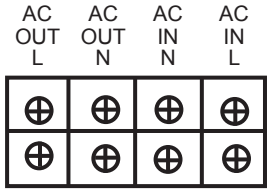

For the "AC IN", we have included a 9 Awg wire (Green, Black, White). It is intended to supply city power to the inverter / charger. The U-lugs are intended to connect to the Terminal Block.

G1 to Case Ground in panel
AC IN to AC IN L
N1 to AC IN N

The cut end is intended to be wired into a 30 Amp dedicated breaker in a distribution panel.

G1 (Green) to Earth / Ground in panel
AC IN (Black) to hot leg in panel fused at 30 Amp
N1 (White) to Neutral in panel

You may choose to connect some type of plug to the city power end of the cable (unfinished ends). Keep in mind the inverter is rated at 3000 walts. That equates to 25 Amp. A standard plug is designed for 15 to 20 Amp. A standard AC outlet is typically breakered at 20 Amp. The Inverter's max output may be limited when in "City" mode if wired to a source not capable of supplying at least 30 Amp, 25 Amp through put and 3 Amp for charger.

AC Output

There are 2 ways to use the Output power.

1st: Any of the 4 ac receptacles will provide up to 1500W, a total max combined of 3000W. This complies with nec codes.

2nd: Terminal Block
Using 25 Amps or higher (minimum 12Awg) wire, connect to Terminal Block output.
Green to Case ground in panel
Black to AC OUT L
White to AC OUT N

This cable is not supplied with inverter.
The opposite end may be any type of 25 Amp or higher rating. It may also be hard wired to your equipment or dedicated panel for distribution.

8. At this point you are ready to power up the inverter.
   You may plug in your AC devices at any time, but only turn them on after succesful power up of inverter.
9. Turn Protect Switch to ON. The DC volts bar will indicate your battery Voltage.
   It should be in the Green zone.
10. Turn on the Red Main Power switch. The inverter will go through an exetensive series of self tests.
    You will hear 3 beeps. See red light blink once,following by green lamp staying on.
    Inverter is now ready to use.

Digital LED Display

The display alternates between the battery voltage and % of maximum inverter load.

EX: No Load - 000 is 0 Watts
Max Load - 0L is over 3000 Watts
50% Load - 50 is about 1500 Watts

Connecting and Using AIMS Power Inverter

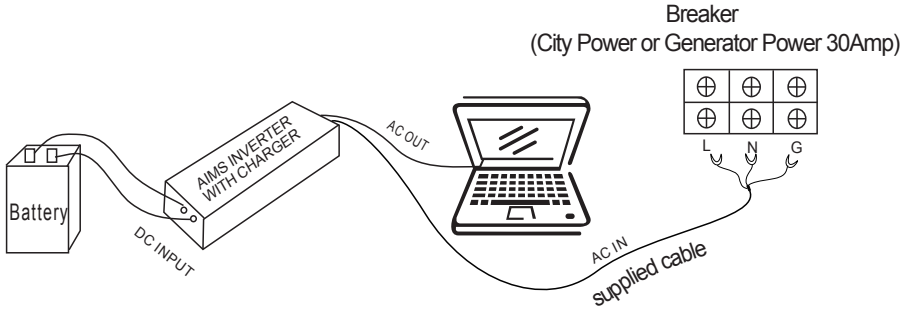

Connect the cables to the terminal block as below:

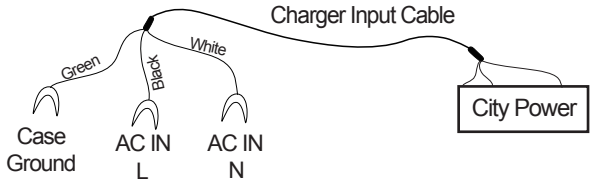

Case Ground: Connect this green cable to the Case Ground of the PWRIC300012S .
AC IN : Connect this black cable to the “AC IN L” of the PWRIC300012S terminal block.
N1: Connect this white cable to the “AC IN N” of the PWRIC300012S terminal block.
The City Power end of cable is in intended to connect to 30 Amp breaker in panel (or generator).
It will supply City Power through inverter / charger when availble.

Note: Never connect any wires to a hot or live power source!

A Few Helpful Inverter Tips:

- Never leave an inverter connected to a line where other power (Vac) may feed into inverter. It doesn't matter if inverter is on or off

- Using inverters in moist areas is a common cause for their drivers to burn out. Even an outdoor extension cord that was laying in a puddle a day previously, may have enough moisture to burn out the drivers of the inverter. Tip: if using inverter in rain one day, allow cords that may have gotten wet to dry a few days before using in inverter again

- Always prevent foreign objects from entering inverter through the vent or fan openings

- Keep cables between inverter and batteries as short as possible. This will help your batteries perform their best

- Don't over tighten nuts to battery or inverter, but do check them occasionally.

- If the cables between your battery and inverter get hot while under heavy load, then you should onsider using heavier cables

- When selecting an inverter, try to buy one that will stay in the continuous operating range and do not rely on advertised surges

- If cables need to be run, it is best to keep inverter as close as possible to batteries. Use extension cords on the output side (Vac output) rather than extending the Vdc cables.

- Be aware of lighting storms. If struck, inverter would go to a permanent Over load state and may even smoke

- Vac extension cords should not exceed 200 feet or you will have signal loss

- Inverters emit RF and may cause interference. This is noticeable in AM radio and often monitors and computer mice

- Never parallel multiple inverter outputs. This will generally burn the ac drivers out.

Model No.	PWRIC300012S
	12V
Output power continuous	3KW
Max. Surge power	6KW
AC Output Voltage	120 VAC
DC Input Voltage	11~16V
Efficiency at MaxLoad	90%
Output frequency	60Hz±0.5%
No Load Current main on no ac in	2A
No Load Current power off	0W
Input Low Voltage Protection	Yes
Input High Voltage Protection	Yes
Reverse polarity protection	Yes
Output Short Circuit Protection	Yes
Overload shut-down	Yes
Temperature control fan	Yes
Over temperature shut- down	Yes
Charge current	30A
Charge cutoff	13.8VAC
Charge Input	120VAC
Charge Output	12VDC
Automatic transfer	Yes
Dimensions(L x W x H inch)	22.0x 8.3x 5.0
Dimensions(L x W x H mm)	560x 210 x127
Net weight (lbs)	28.7
Gross weight (lbs)	35.3
Output Waveform	Pure Sine Wave with PWM

Made in China

Line drawing and dimension

－PWRIC300012S

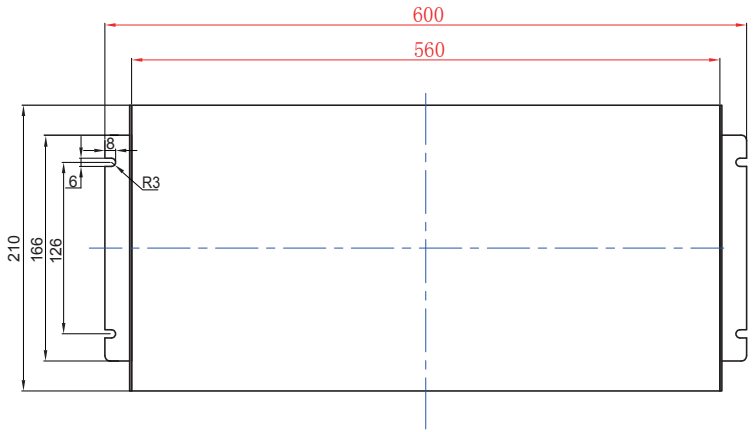

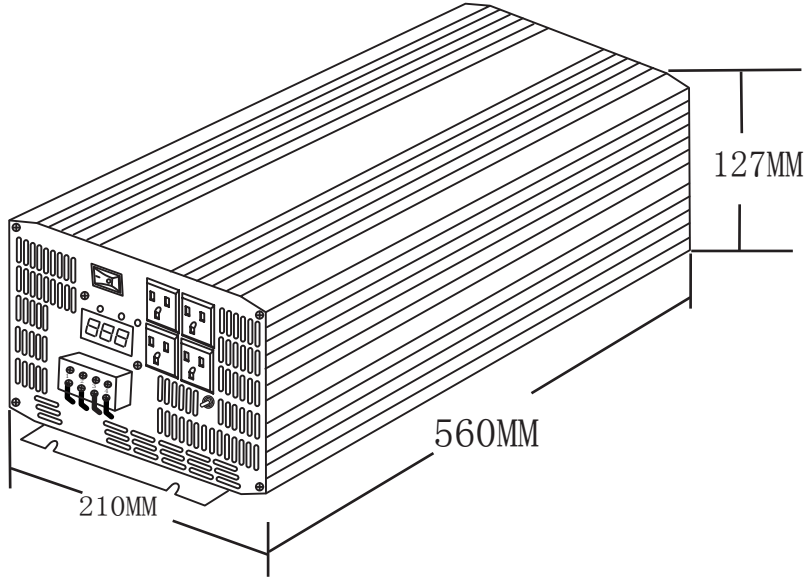

AIMS Operating Corp., Inc. dba AIMS Power Warranty Instructions:

This product is designed using the most modern digital technology and under very strict quality control and testing guide lines. If however you feel this product is not performing as it should, please contact us:

techsupport@aimscorp.net or (775)762-5400

We will do our best to resolve your concerns. If the product needs repair or replacement, make sure to keep your receipt/invoice, as that will need to be sent back along with the package and RA# prepaid to AIMS. You have a full 1 year from date of purchase warranty.

This warranty is valid world wide with the exception that freight and duty charges incurred outside the contiguous 48 United States will be prepaid by customer.

Except as provided above, AIMS makes no warranty of any kind, express or implied, including without limitation the implied warranties of merchantability and fitness for a particular purpose. In no event shall AIMS be liable for indirect, special or consequential damages. This warranty only applies to AIMS Power branded products. All other name brand products are warranted by and according to their respective manufacturer. Please do not attempt to return non-AIMS Power branded products to AIMS Power.

For additional products such as:

- Modified sine wave inverters
- Pure sine wave inverters
- On Grid Inverters
- Inverter Chargers and Automatic transfer switches
- Custom cut cables
- Batteries
- Solar Products

Please visit our web site: www.aimscorp.net

To find out where to buy any of our products, you may also e-mail: sales@aimscorp.net or call (775)359-6703.

AIMS Power™
a Division of the AIMS Corporation

AIMS Power™
a Division of the AIMS Corporation